Art. **N30032**

CITROËN JUMPER

2006➡

FIAT DUCATO

2006➡

PEUGEOT BOXER

2006➡

(I) ISTRUZIONI DI MONTAGGIO
(GB) FITTING INSTRUCTIONS
(D) MONTAGEANLEITUNG
(F) INSTRUCTIONS DE MONTAGE
(E) ISTRUCCIONES DE MONTAJE
(P) INSTRUÇÕES DE MONTAGEM
(NL) MONTAGE-INSTRUCTIES
(S) MONTERINGSANVISNING
(FIN) ASENNUSOHJE
(EST) PAIGALDUSJUHEND
(LAT) STIPRINĀŠANAS INSTRUKCIJA
(LT) PRITVIRTINIMO INSTRUKCIJOS
(PL) INSTRUKCJA MONTAŻU
(RUS) Инструкции по установке
(CZ) NÁVOD NA MONTÁŽ
(SK) NÁVOD NA MONTÁŽ
(SLO) NAVODILA ZA PRITRJEVANJE
(HR) UPUTA ZA SASTAVLJANJE
(H) A FELSZERELÉS MÓDJA
(GR) Οδηγίε συναρμολόγηση
(TR) MONTAJ TALIMATLARL
(BG) ИНСТРУКЦИИ ЗА МОНТАЖ
(SRB) UPUTSTVA ZA MONTAŽU

KIT x4

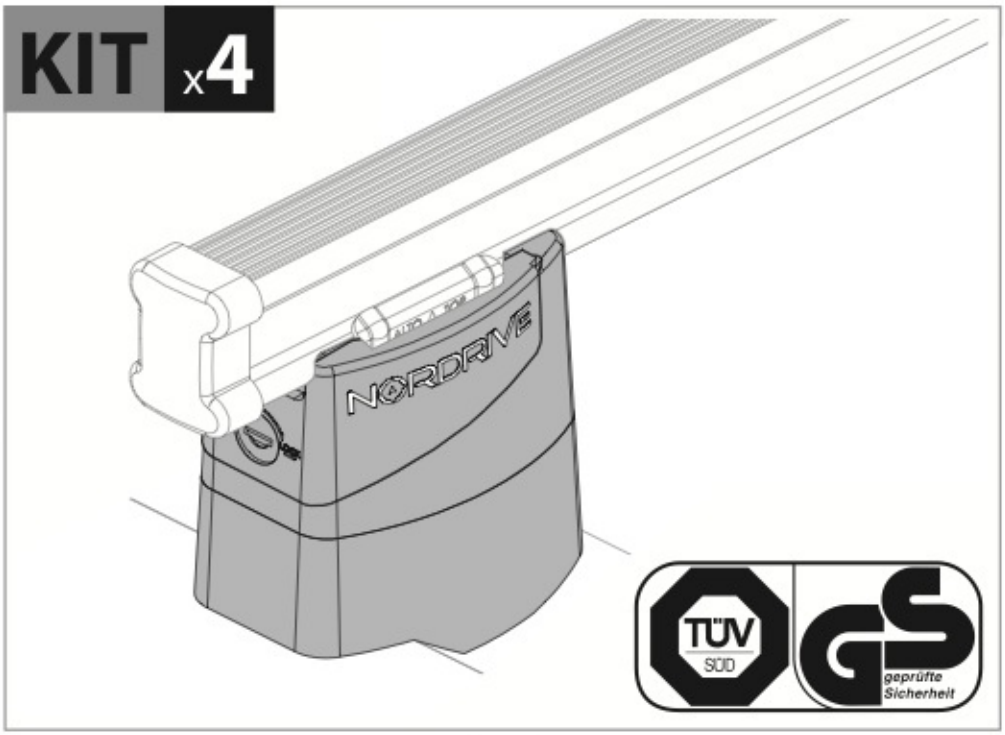

(I) PER (GB) FOR (F) POUR (D) FÜR

Kargo series

Acciaio / Steel

Art. **N10015** x2

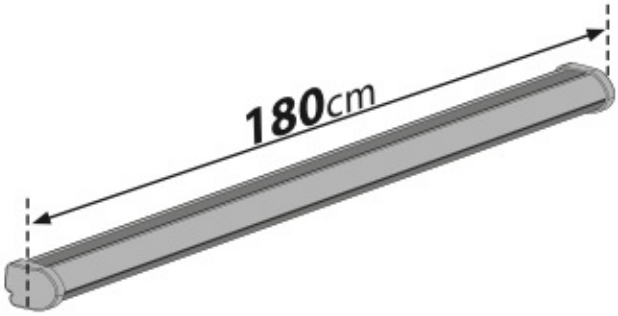

Kargo-Plus series

Alluminio / Aluminium

Art. **N10045** x2

NORDRIVE®
TRANSPORT SOLUTIONS

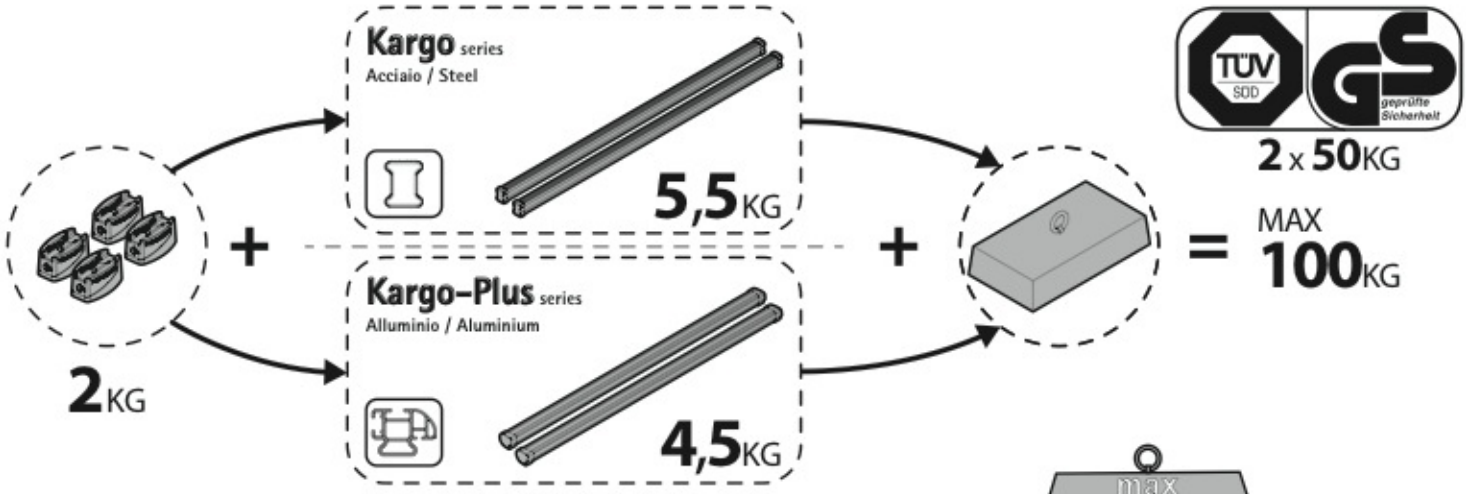

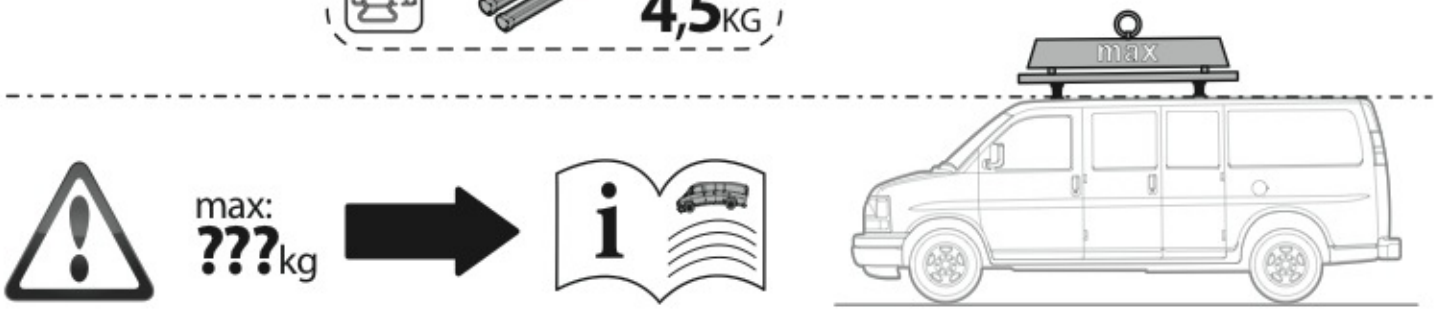

Safety regulations

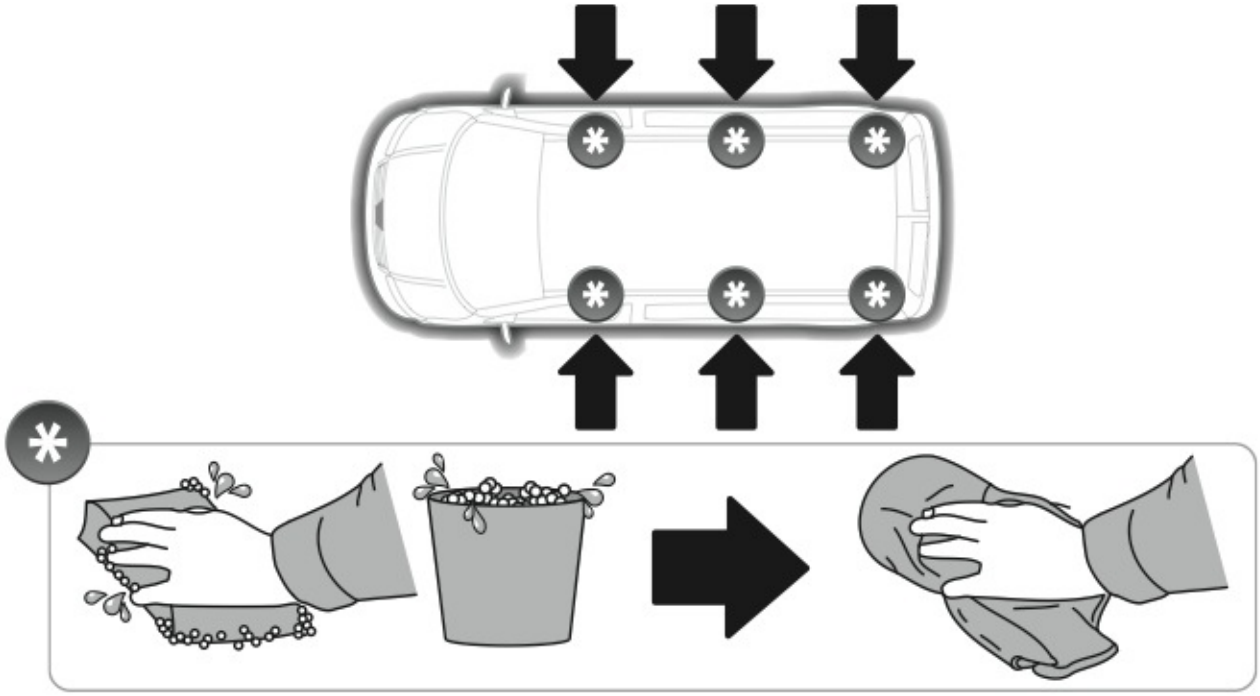

NORDRIVE®
TRANSPORT SOLUTIONS

Art. **N30032**

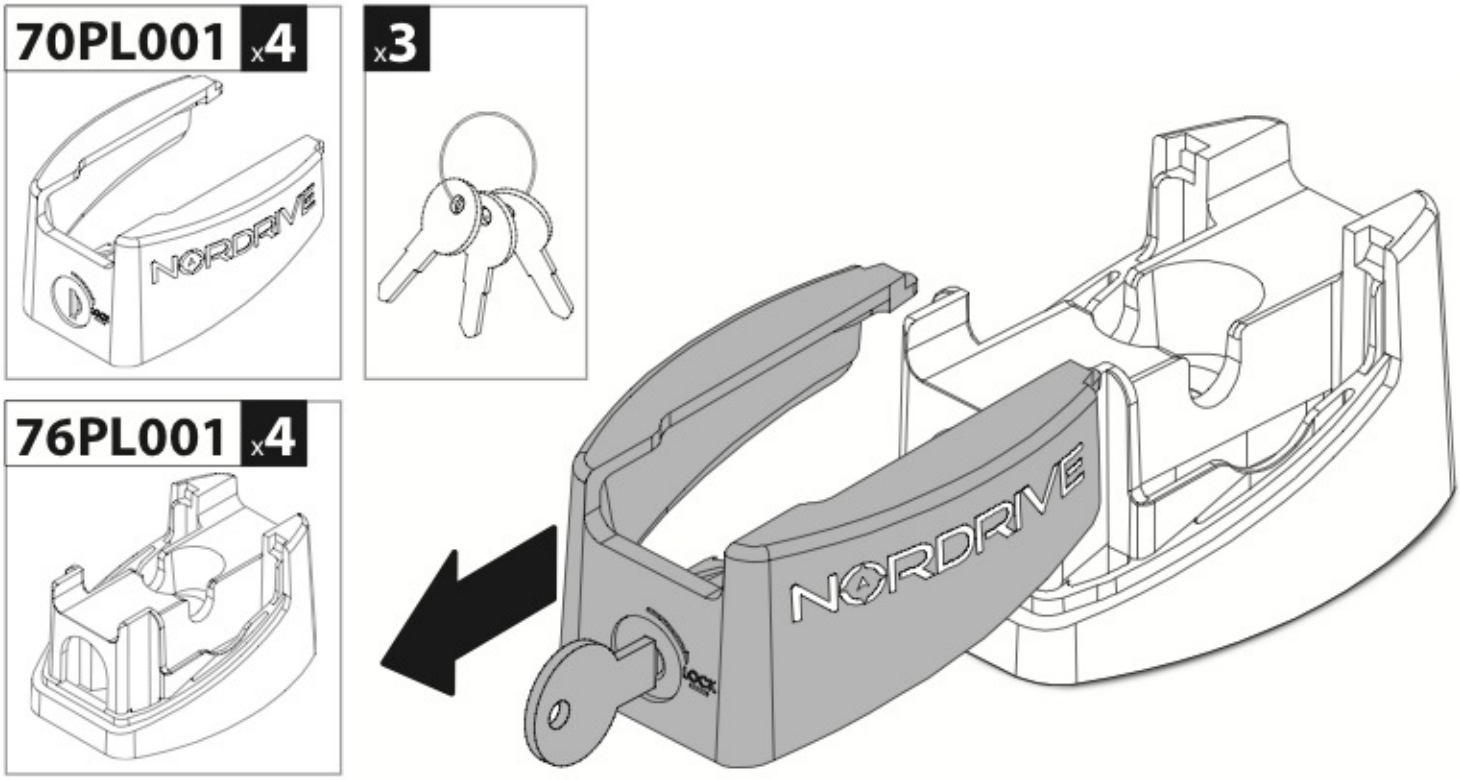

40FE001 x8

60BQ8045 x4

62BB0800 x4

60CE6045 M6x45 x4

61ED0611 x4

82FE0001 ø6 - ø15 x4

60RO004 x4

40FE003 x4

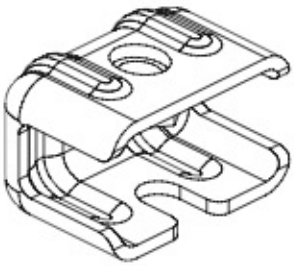

72FE001 x1

72FE002 x1

1

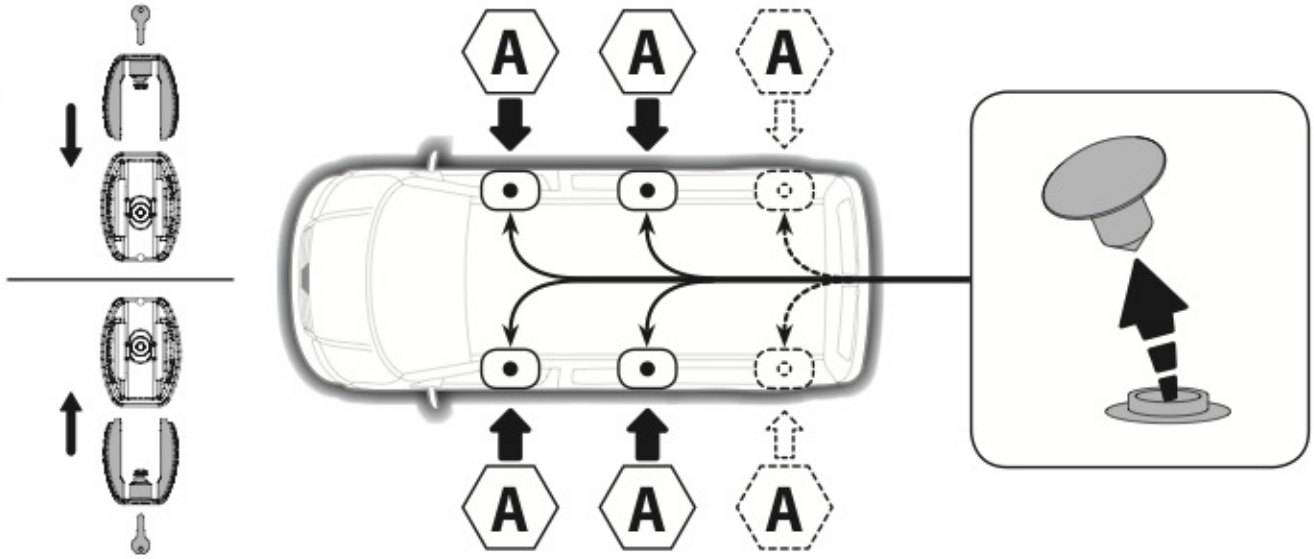

2 A

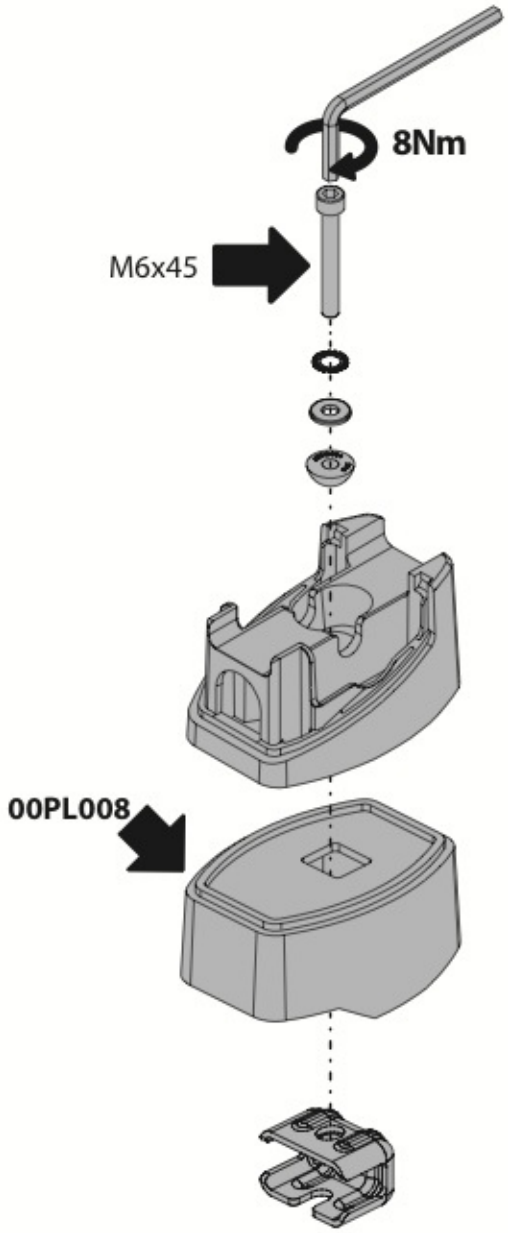

3

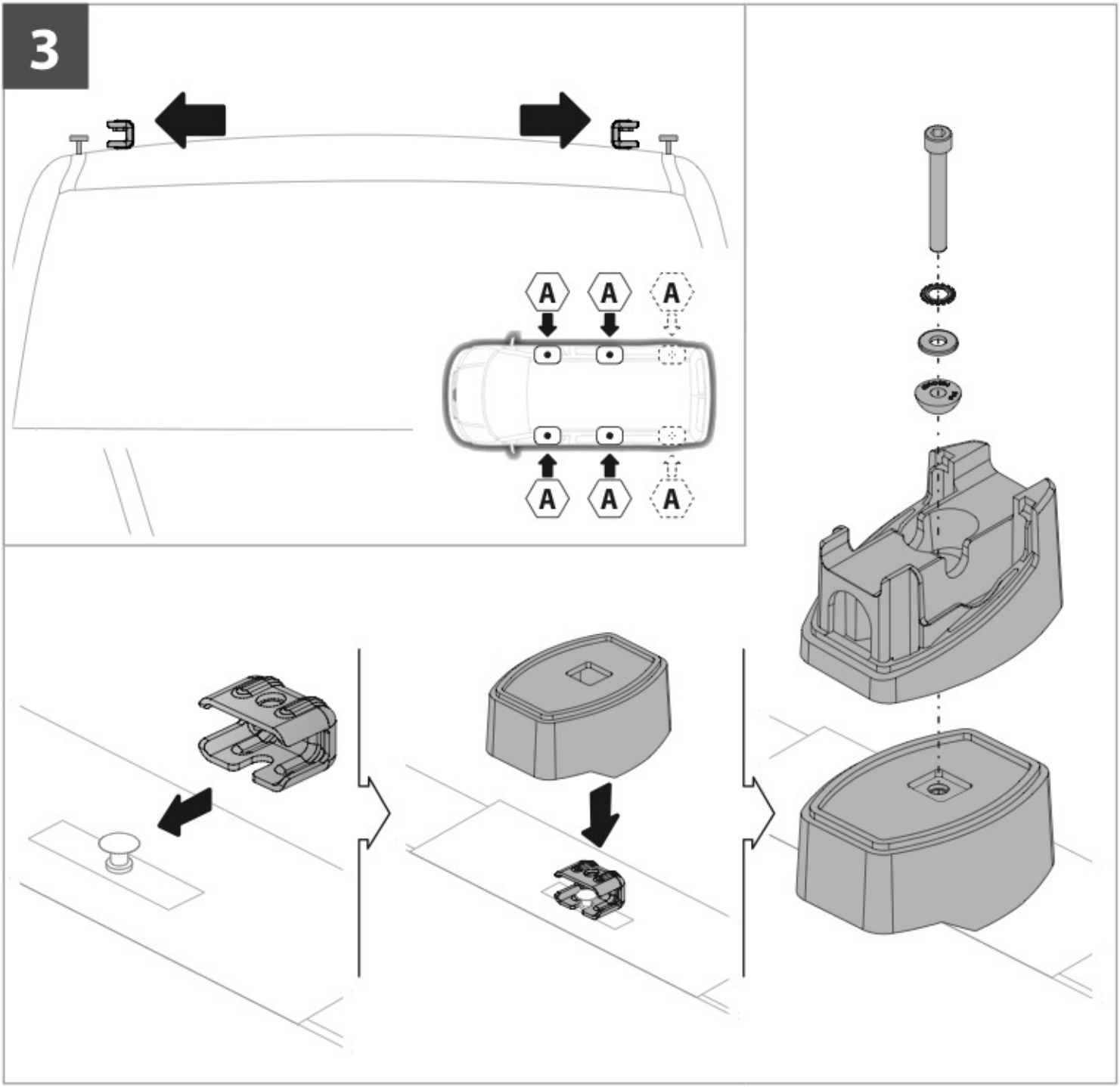

4

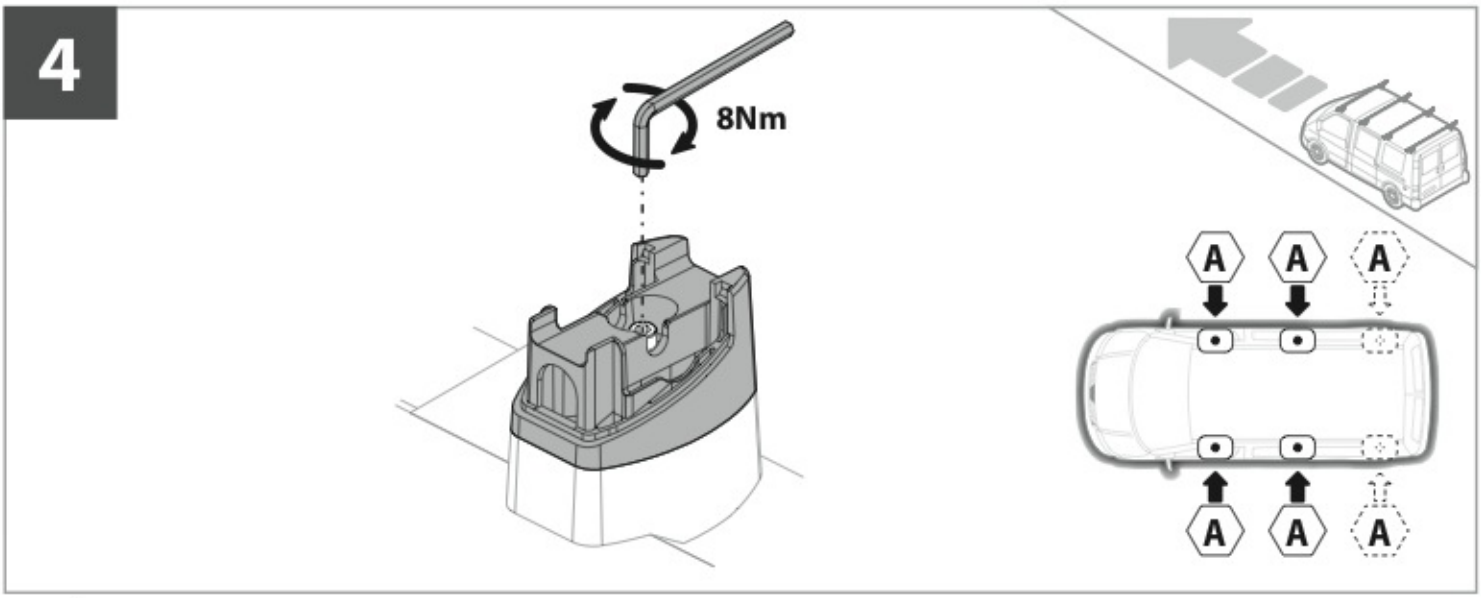

ATTENZIONE
WARNING

Kargo series
Acciaio / Steel

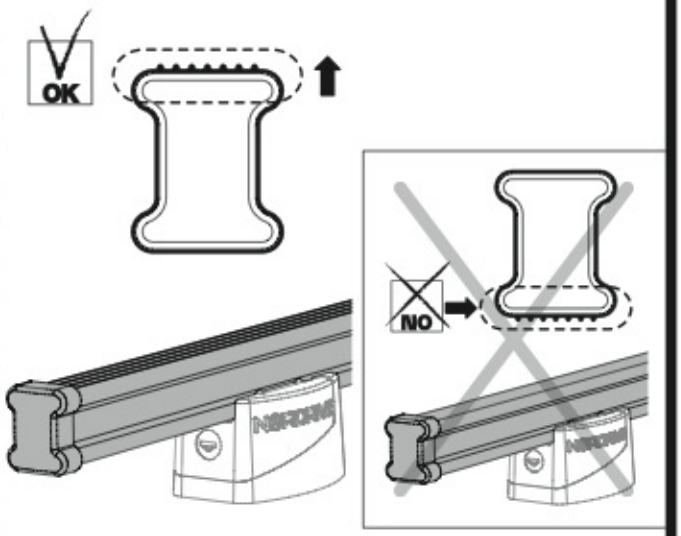

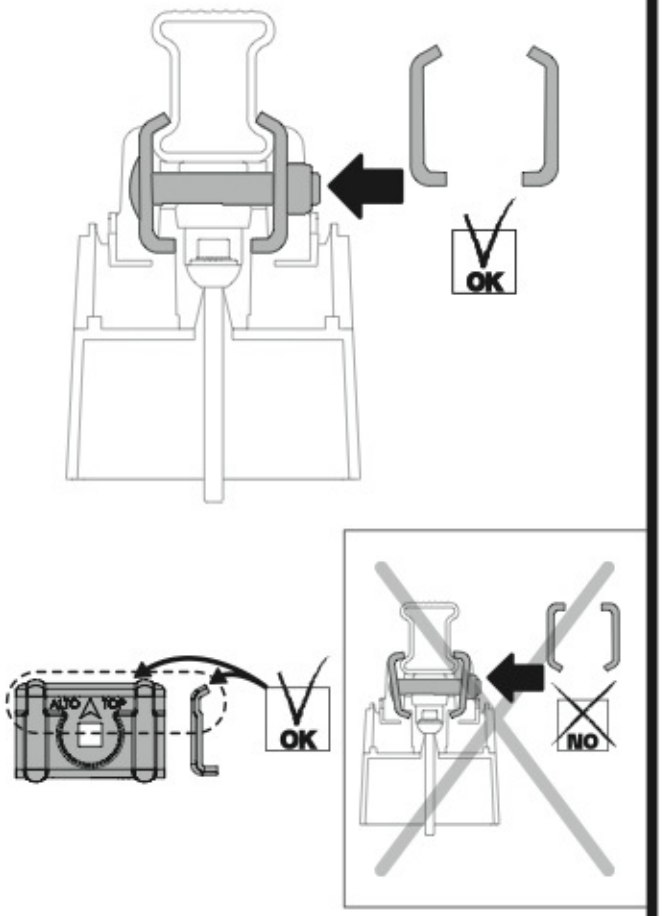

Kargo-Plus series
Alluminio / Aluminium

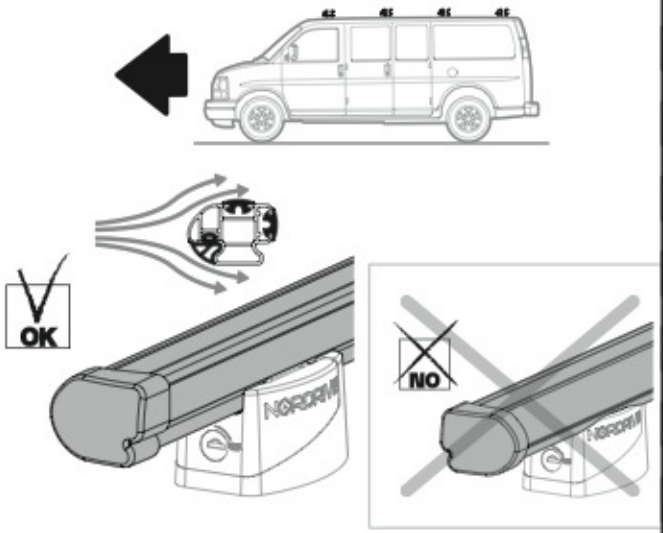

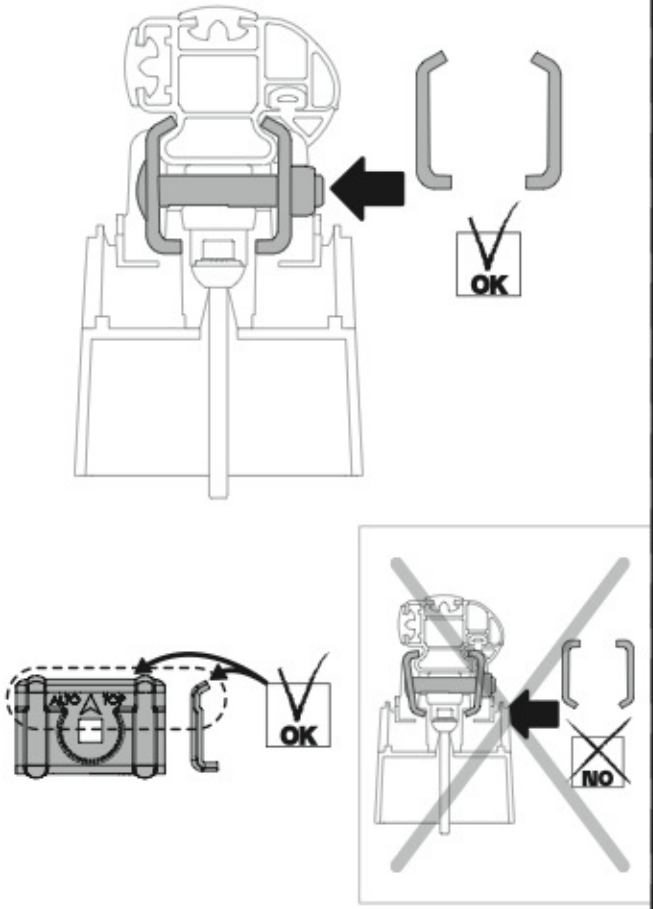

Kargo series

Acciaio / Steel

Kargo-Plus series

Alluminio / Aluminium

5

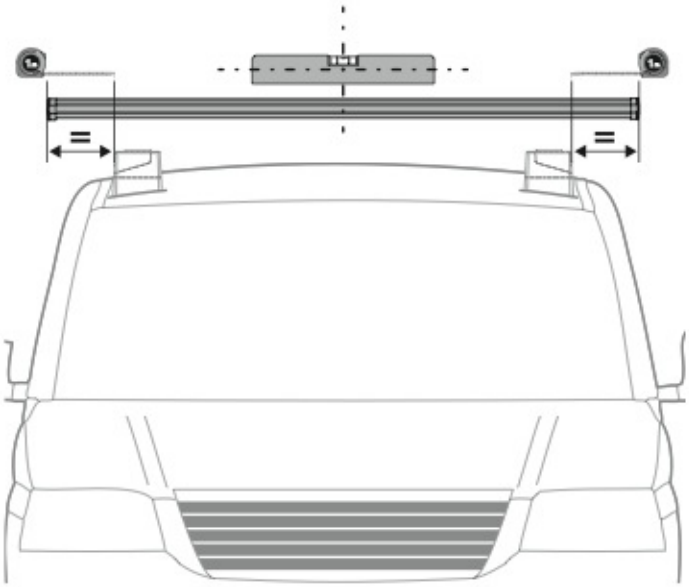

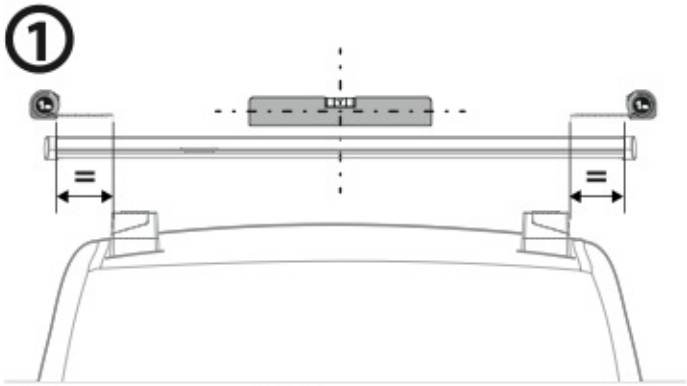

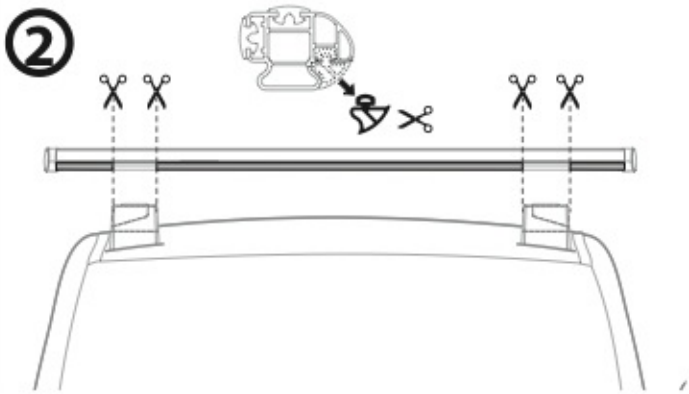

6

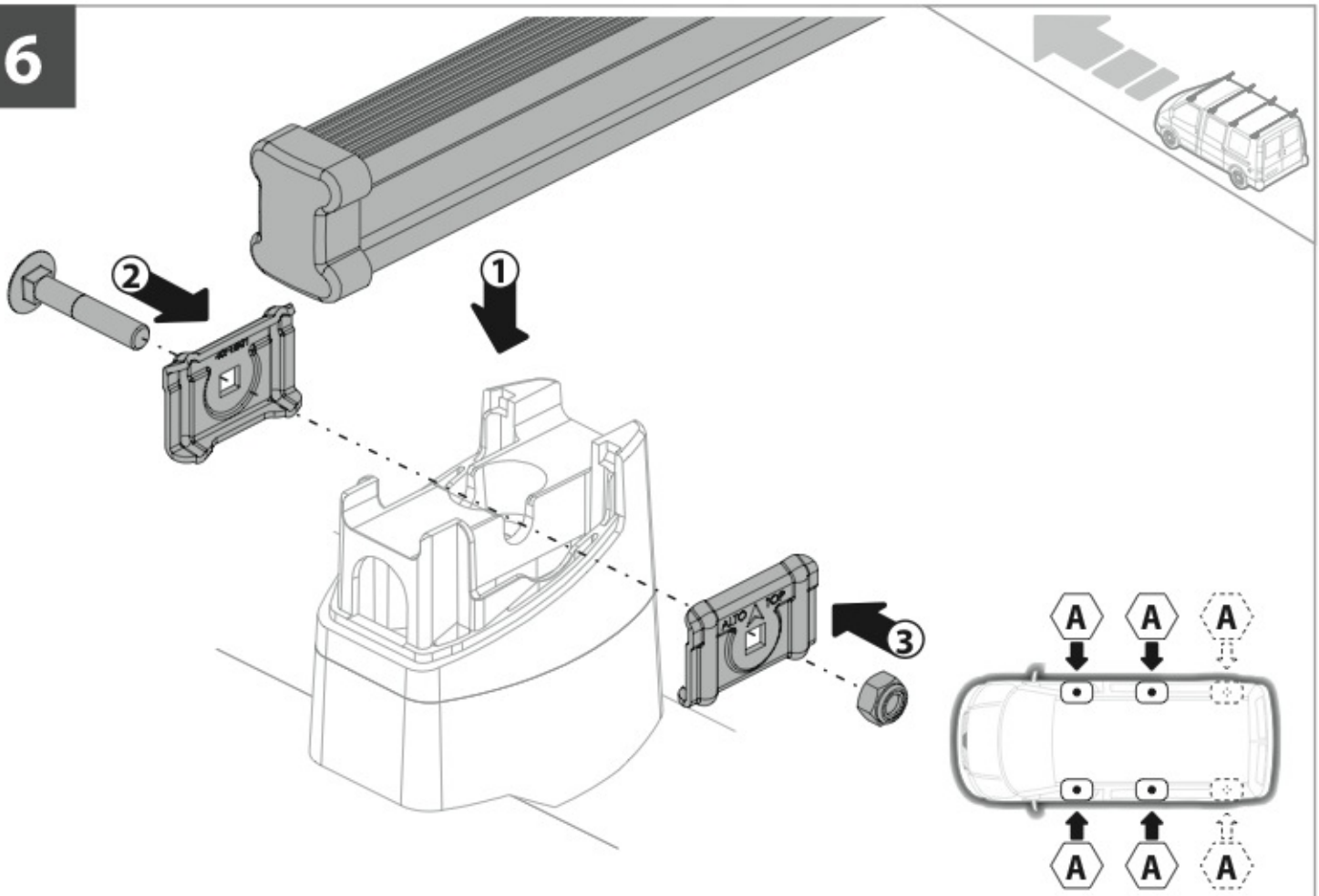

7

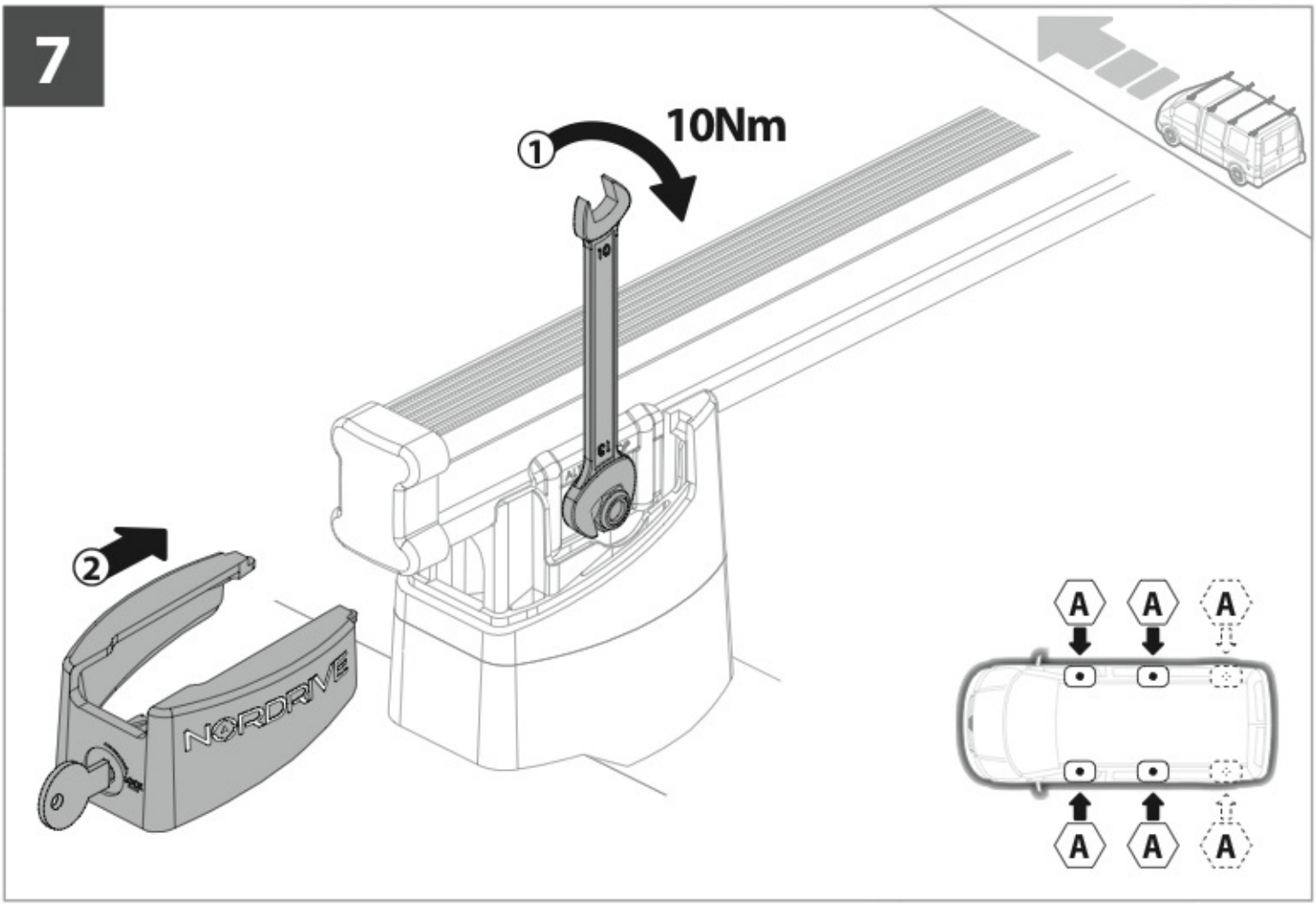

8

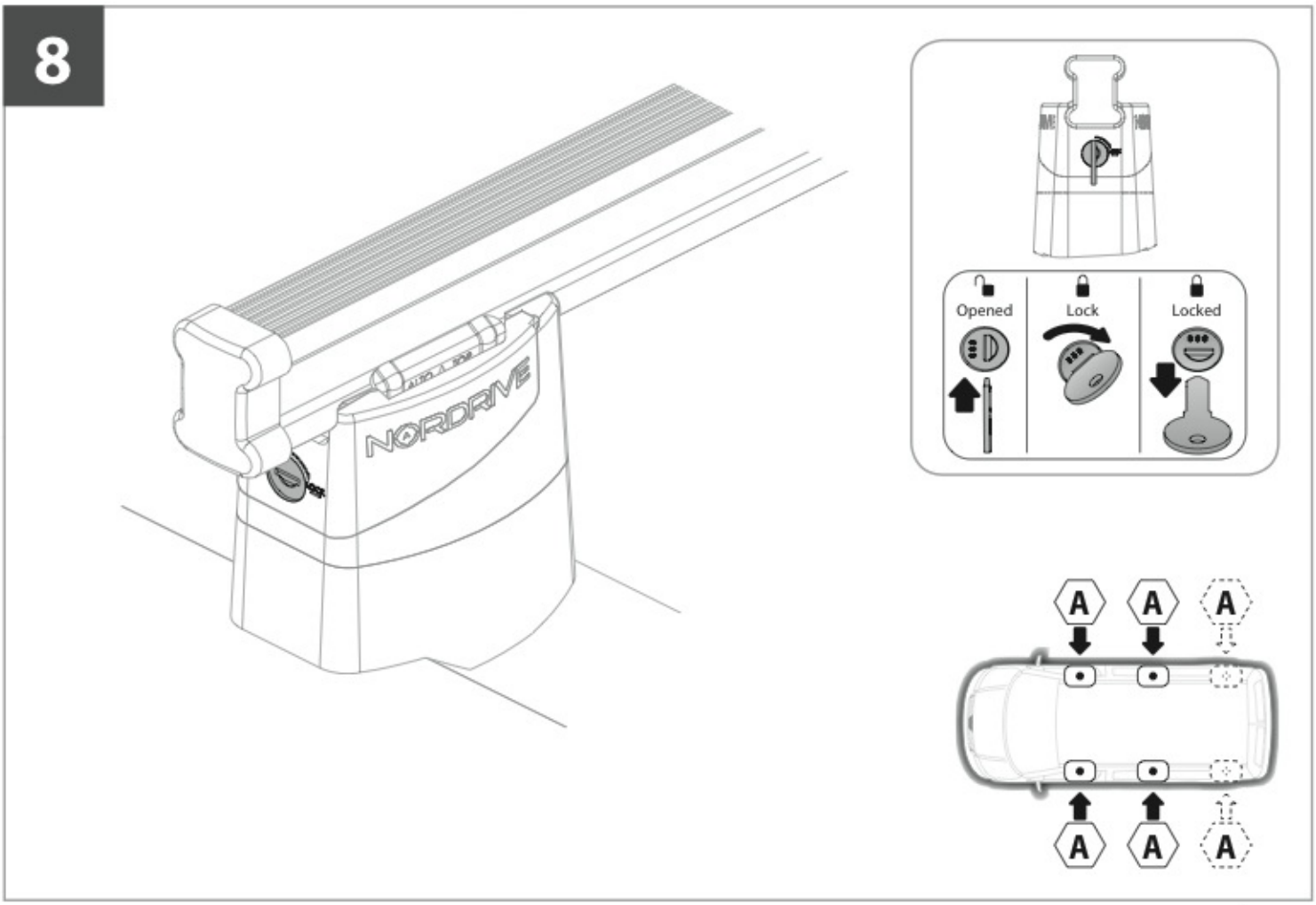

OPTIONALS

Kargo series

Acciaio / Steel

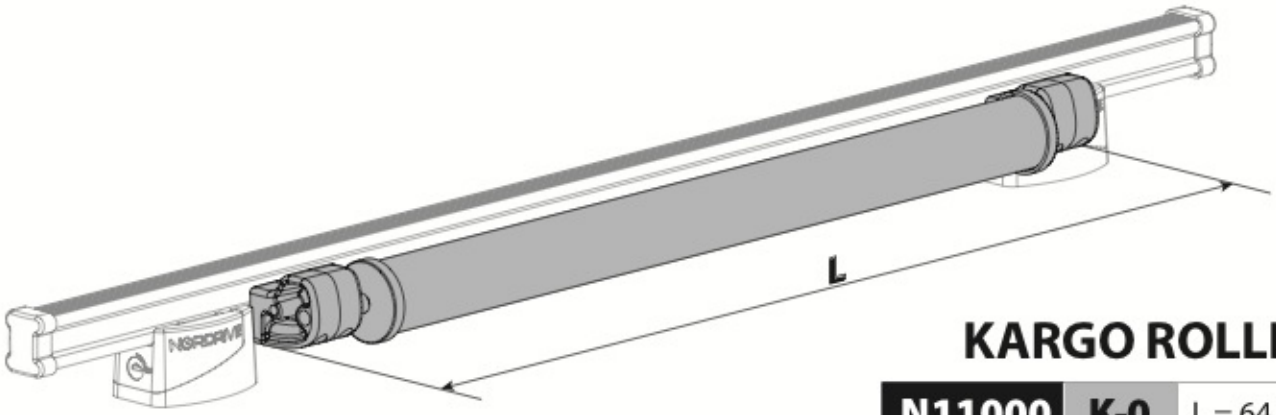

KARGO ROLLER

N11000	K-0	L = 64 cm
N11003	K-7	L = 96 cm

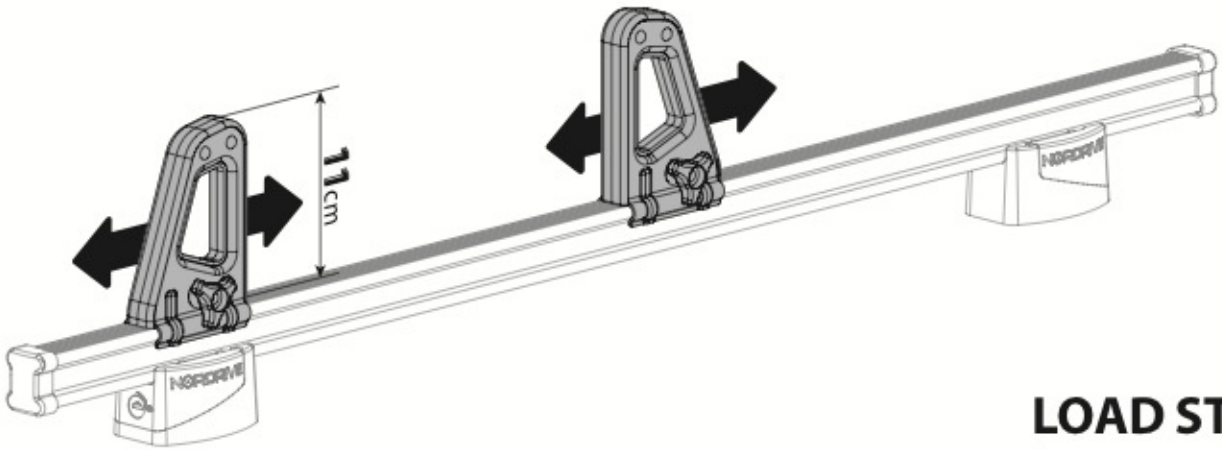

LOAD STOPS

N11001	K-1

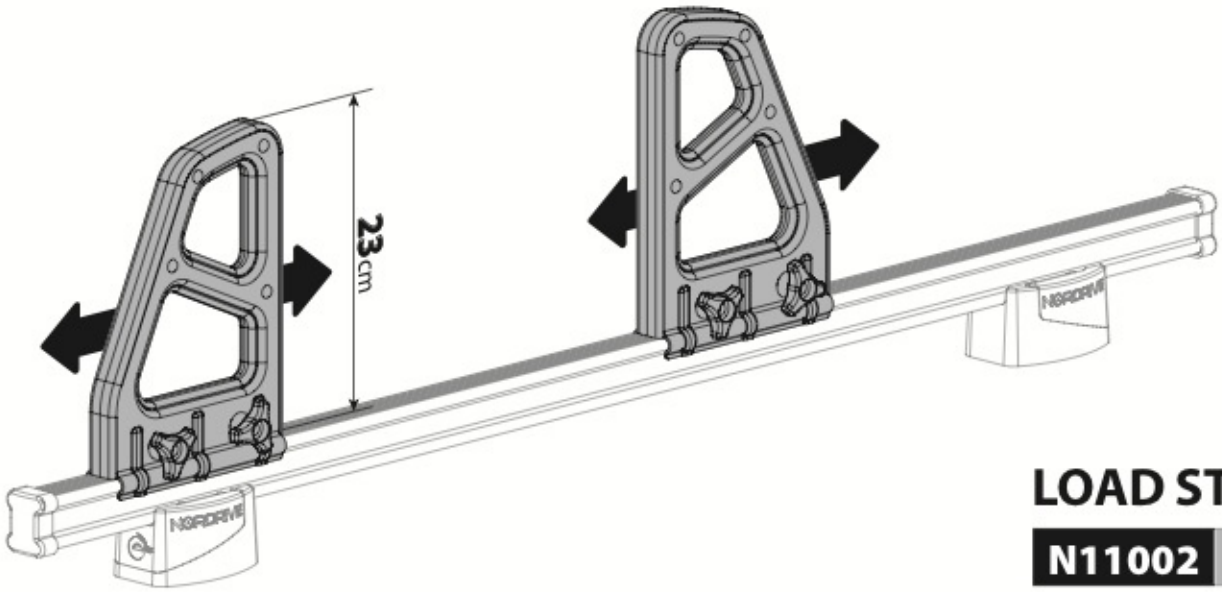

LOAD STOPS

N11002	K-2

OPTIONALS

Kargo-Plus series

Alluminio / Aluminium

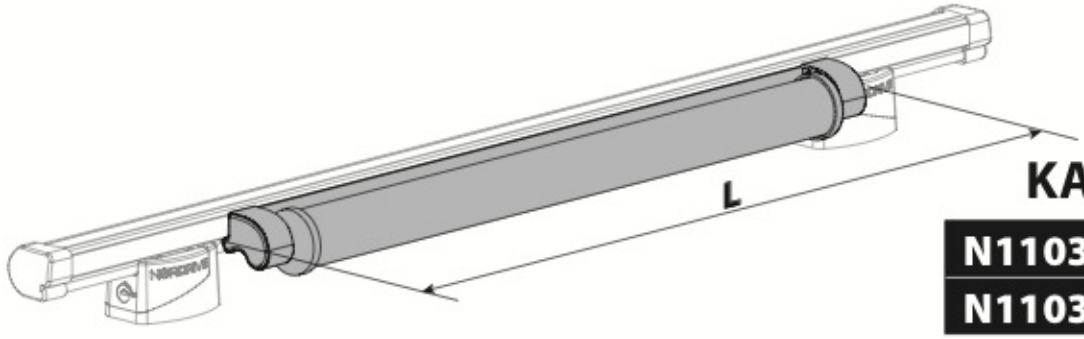

KARGO ROLLER

N11030	KP-0	L = 64 cm
N11034	KP-7	L = 96 cm

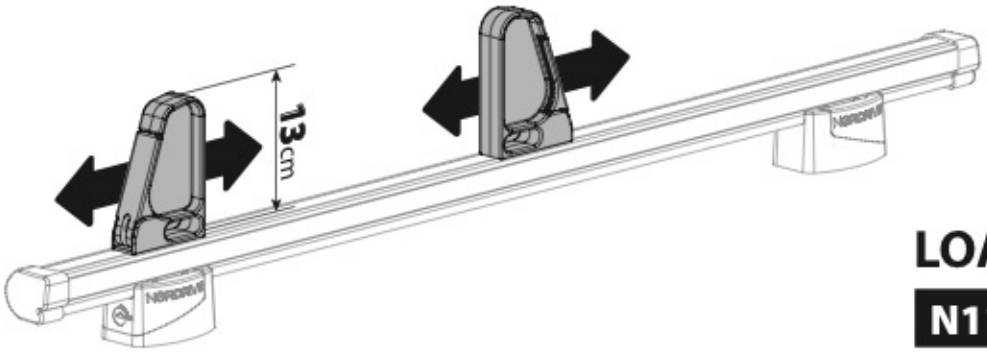

LOAD STOPS

N11031	KP-1

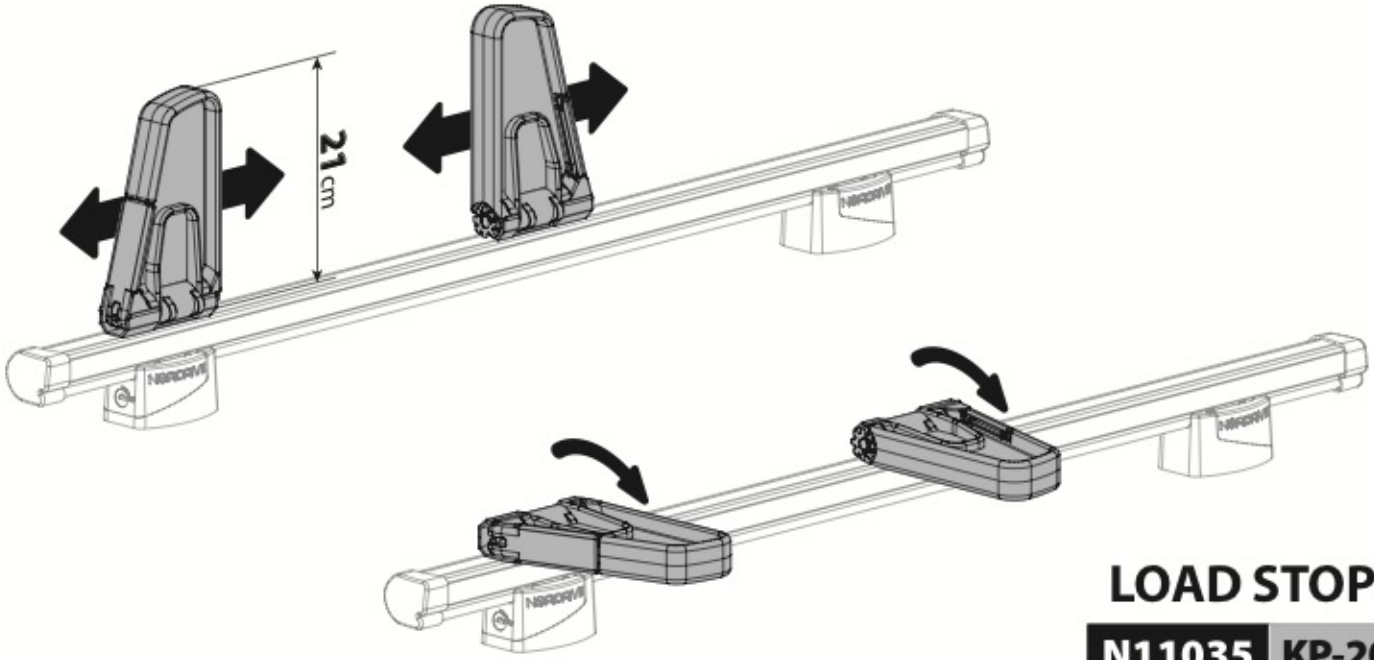

LOAD STOPS

N11035	KP-20

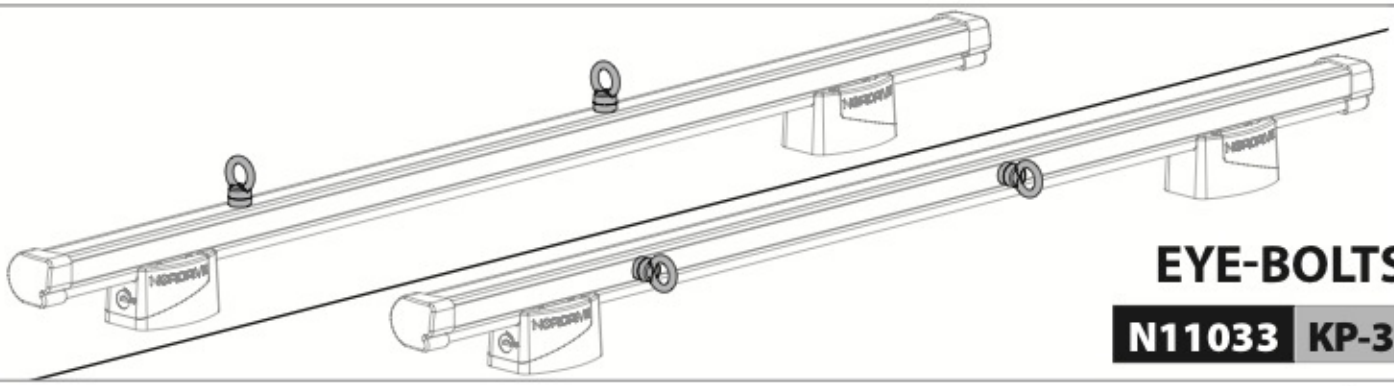

EYE-BOLTS

N11033	KP-3

OPTIONALS

Kargo series

Acciaio / Steel

N11053	K-9	L = 95 cm
N11054	K-11	L = 110 cm

Kargo-Plus series

Alluminio / Aluminium

N11057	KP-9	L = 95 cm
N11058	KP-11	L = 110 cm

SPOILER

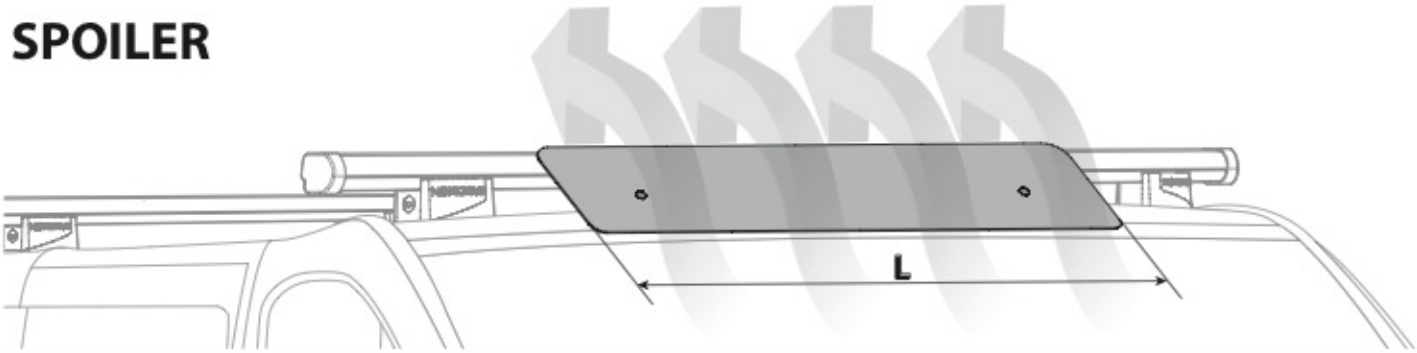

LADDER HOLDER STRAPS

N11065	U-5

Acciaio Steel

Alluminio Aluminium

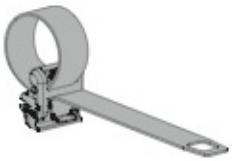

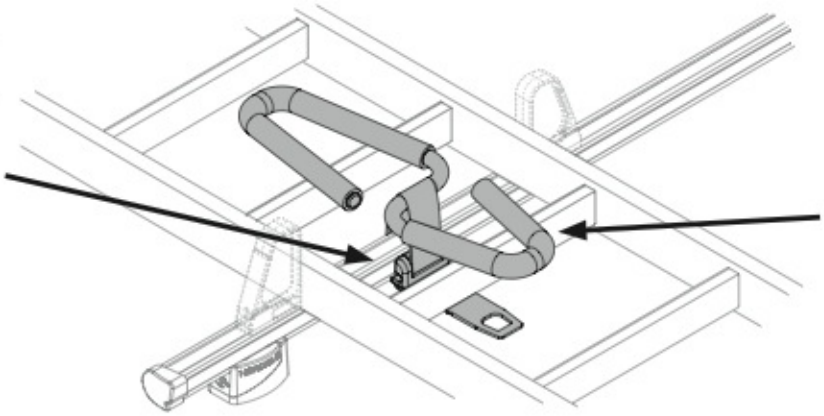

LADDER STEP ADAPTER

N11067	U-6

Acciaio Steel

Alluminio Aluminium

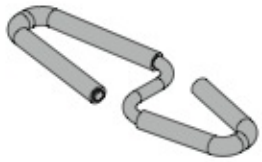

EXTENSION ROLLER

N11020	U-0	L = 64 cm
N11021	U-7	L = 96 cm

Acciaio Steel

Alluminio Aluminium

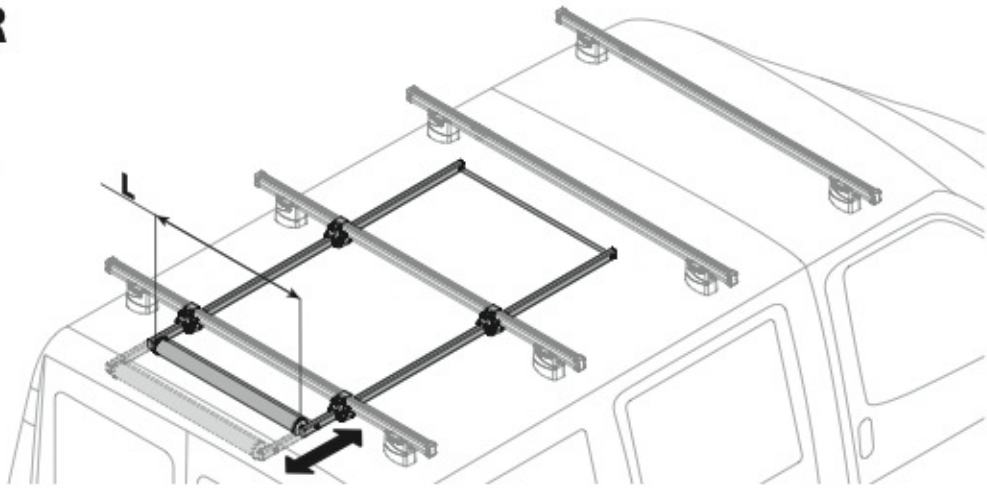

NORDRIVE®
TRANSPORT SOLUTIONS

is a registered trade mark of
LAMPA S.p.A.
46019 Viadana (MN) ITALY
Ditta certificata UNI EN ISO 9001:2008
www.nordrive.it
www.lampa.it

91CA0344 r03